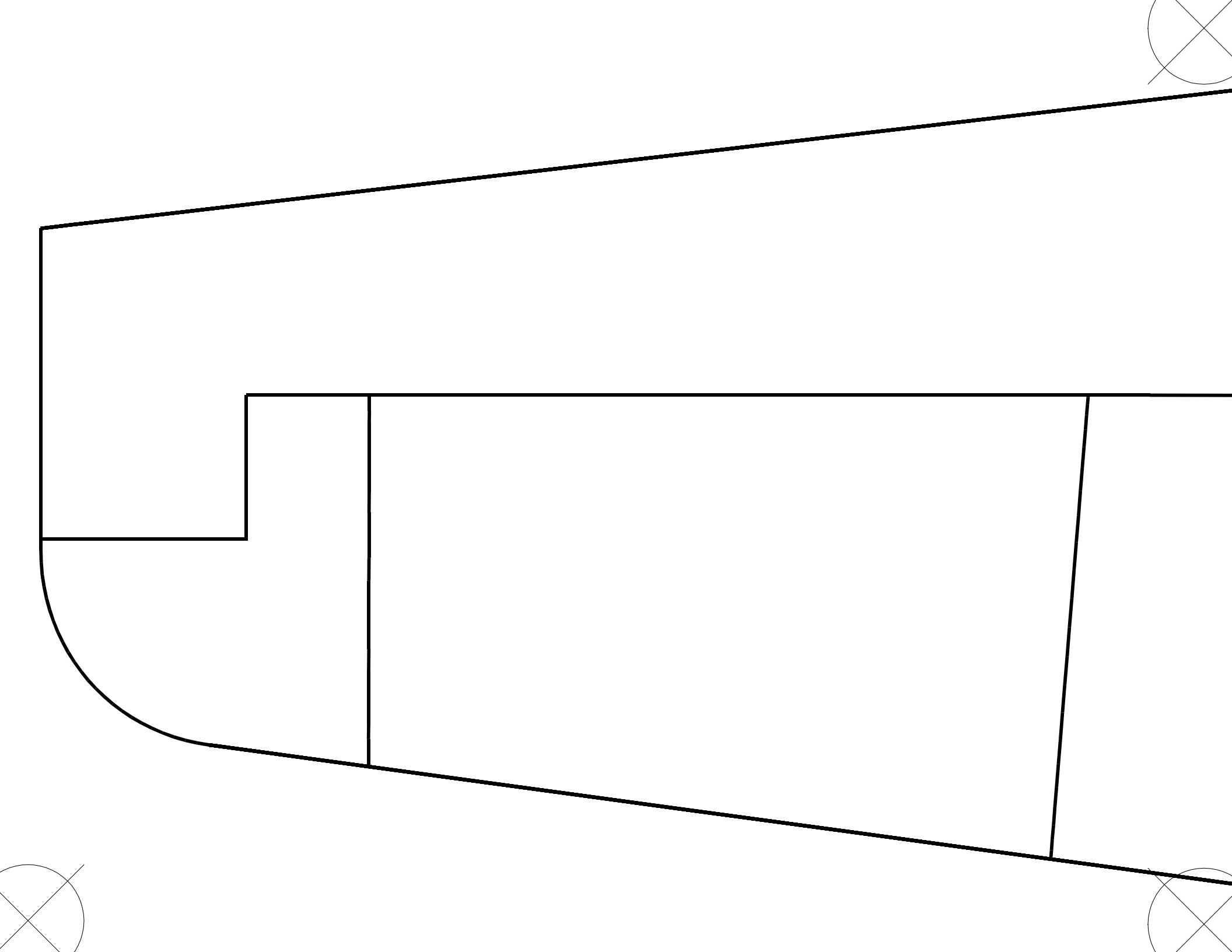

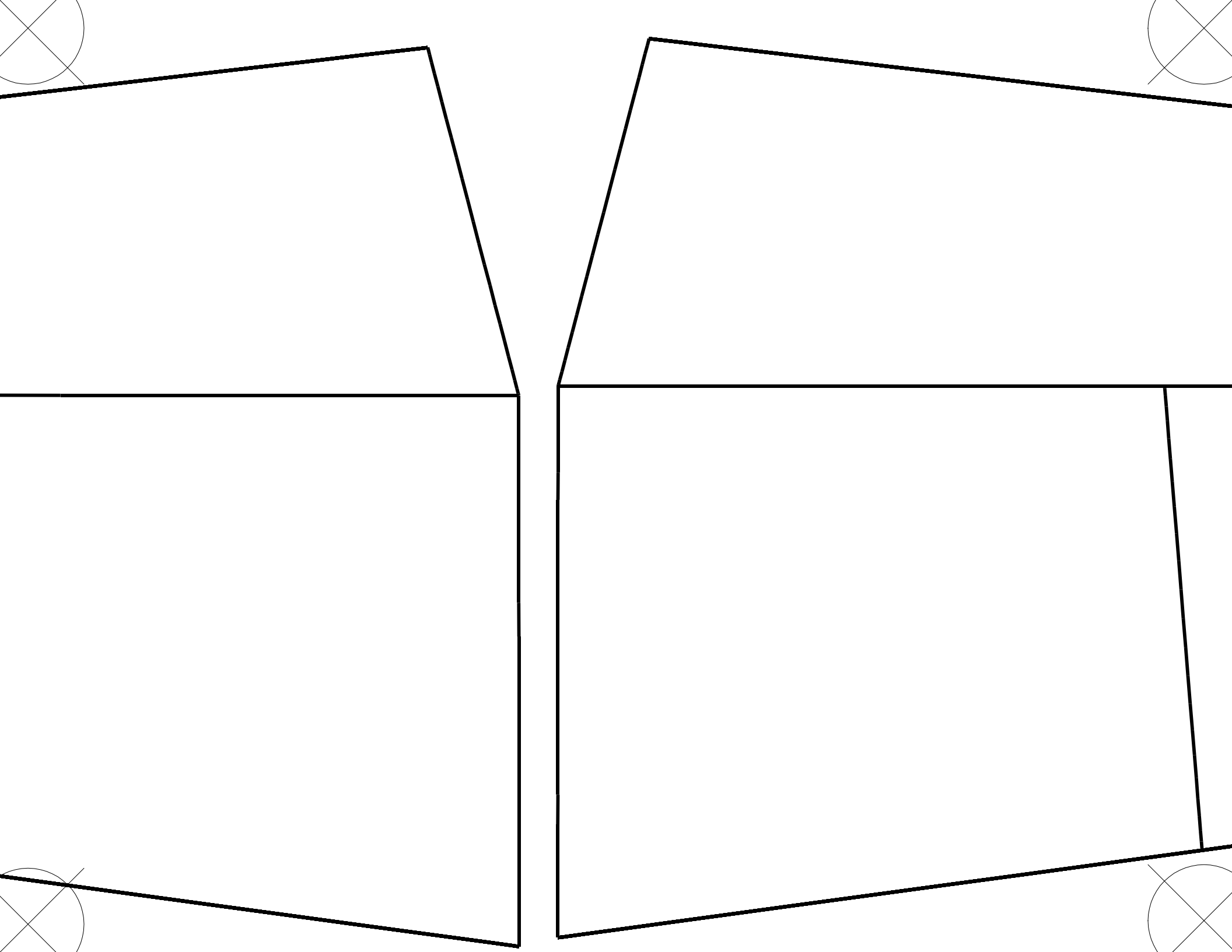

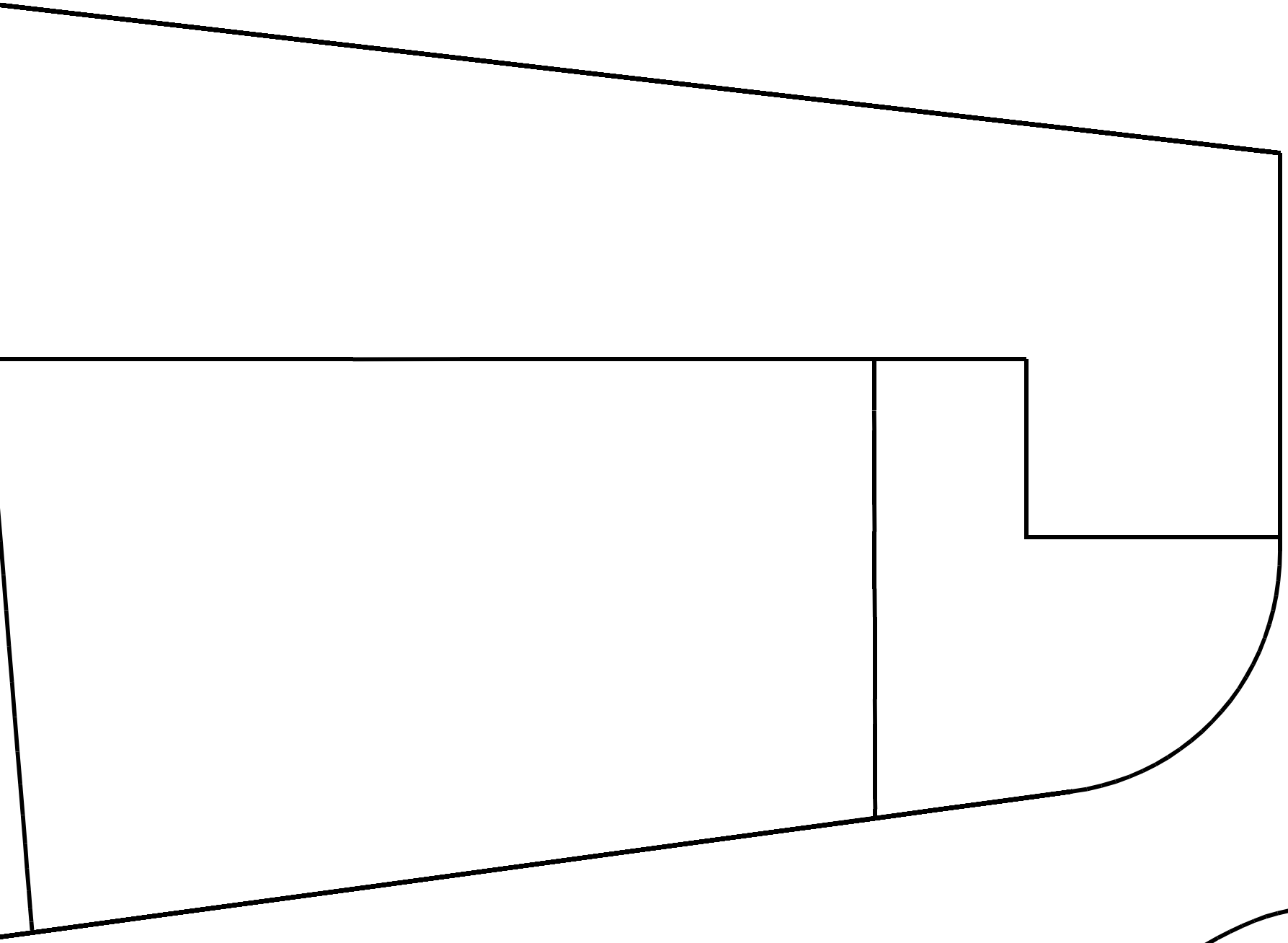

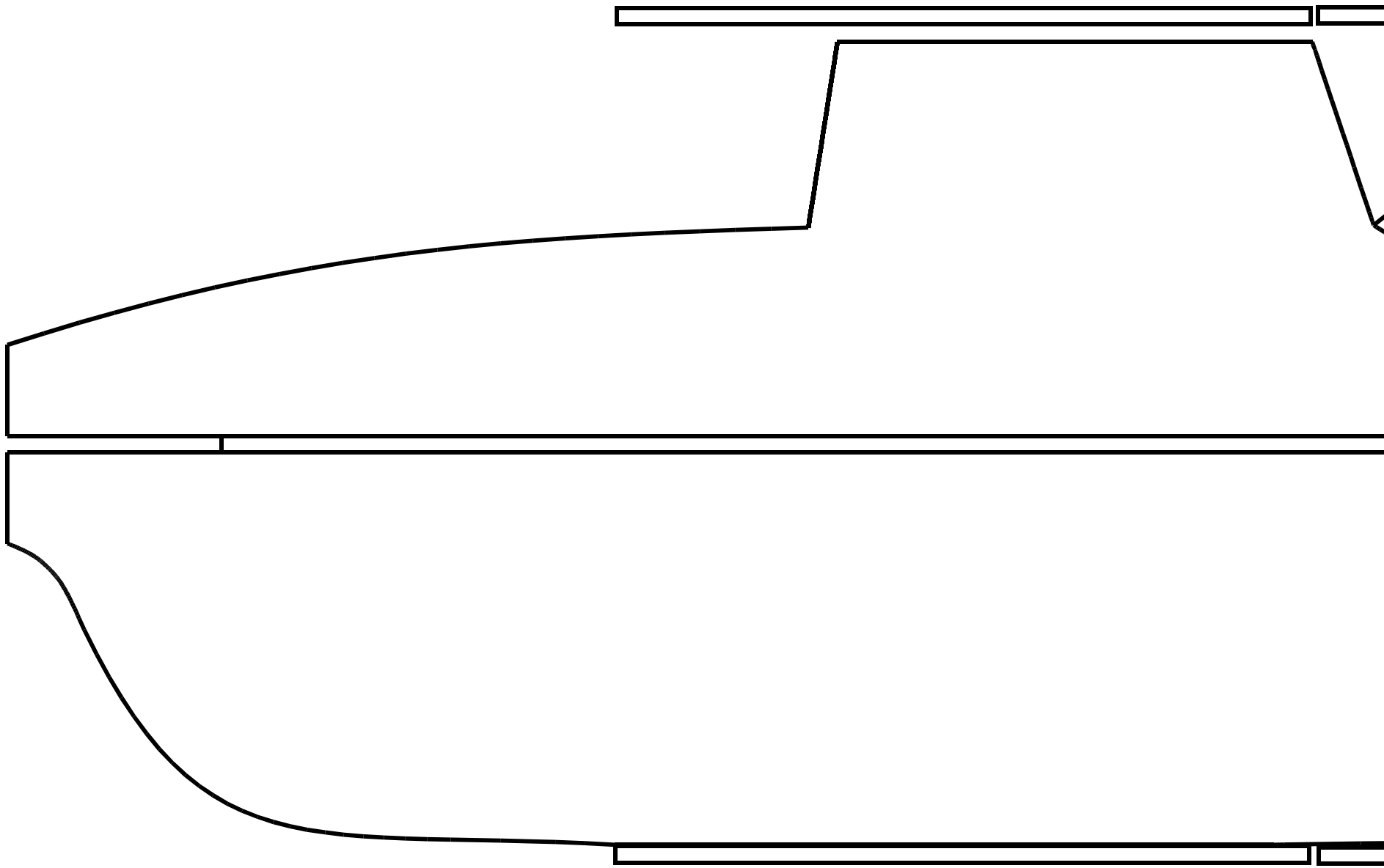

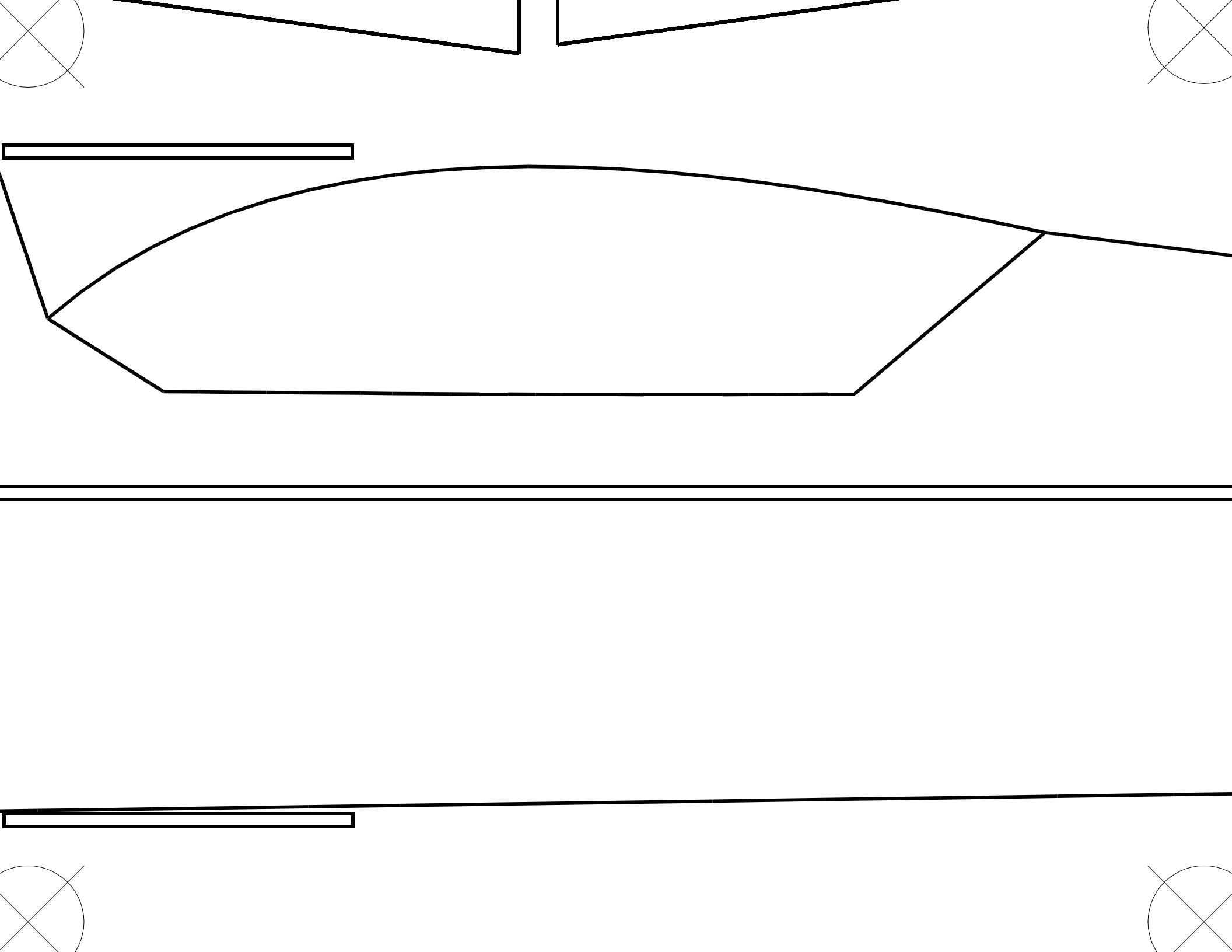

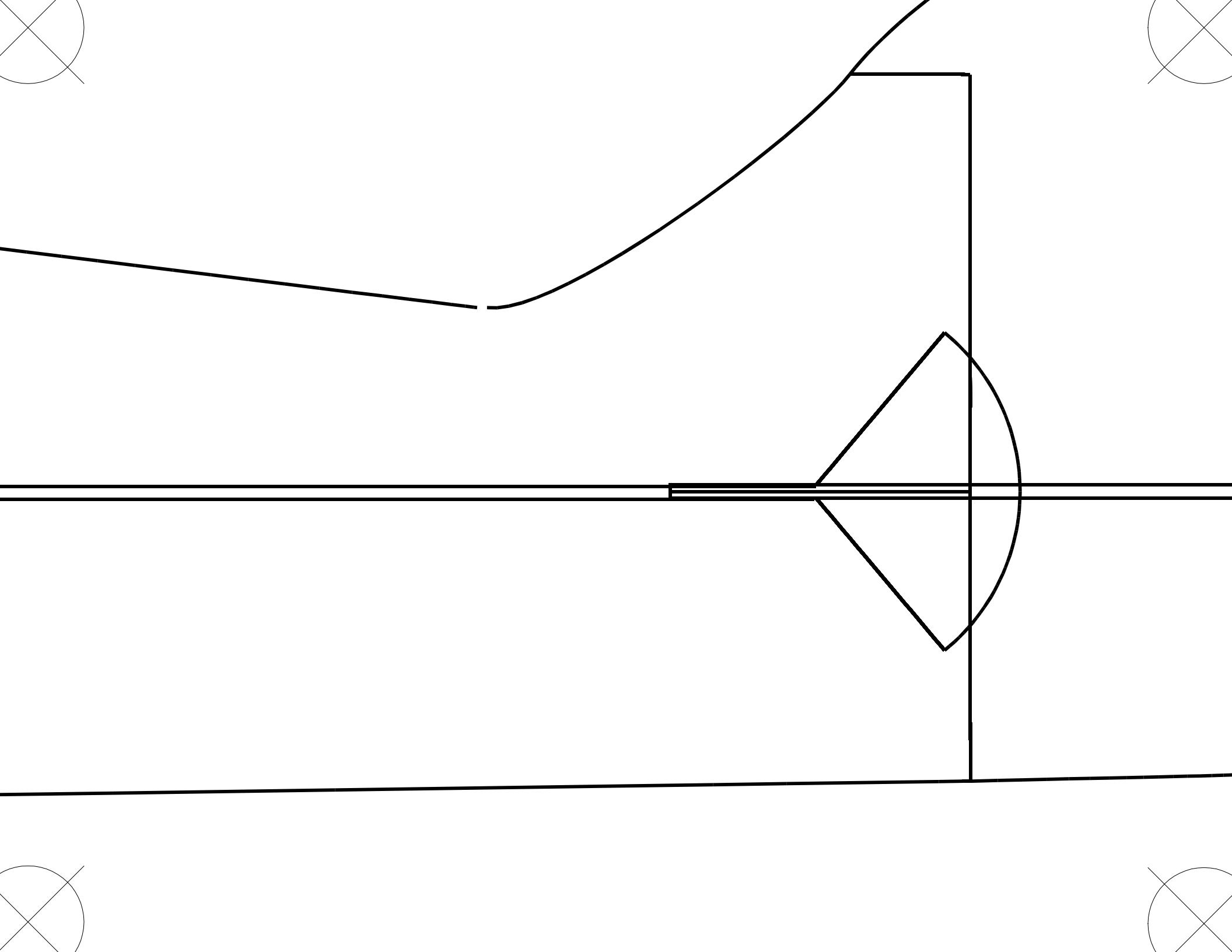

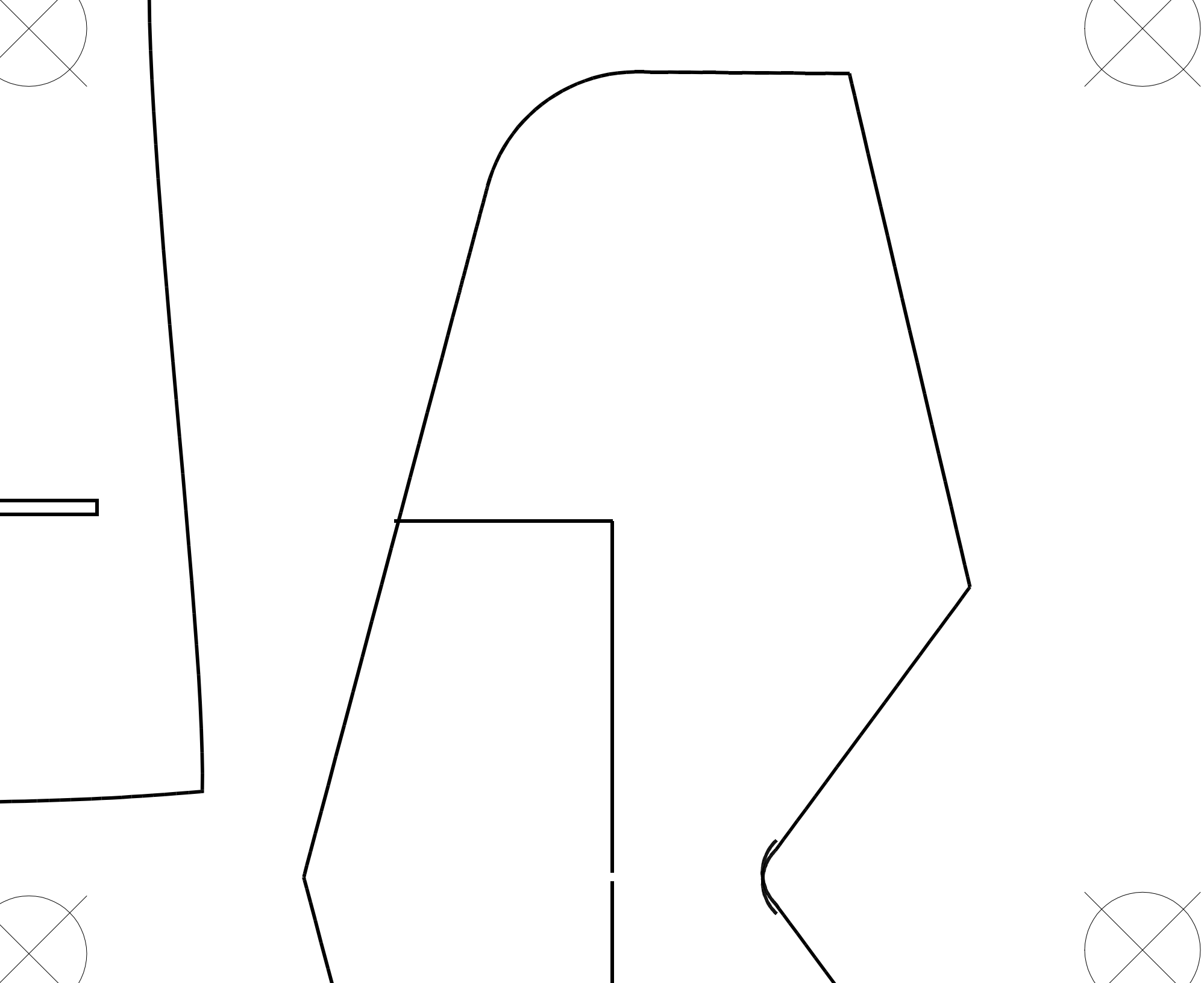

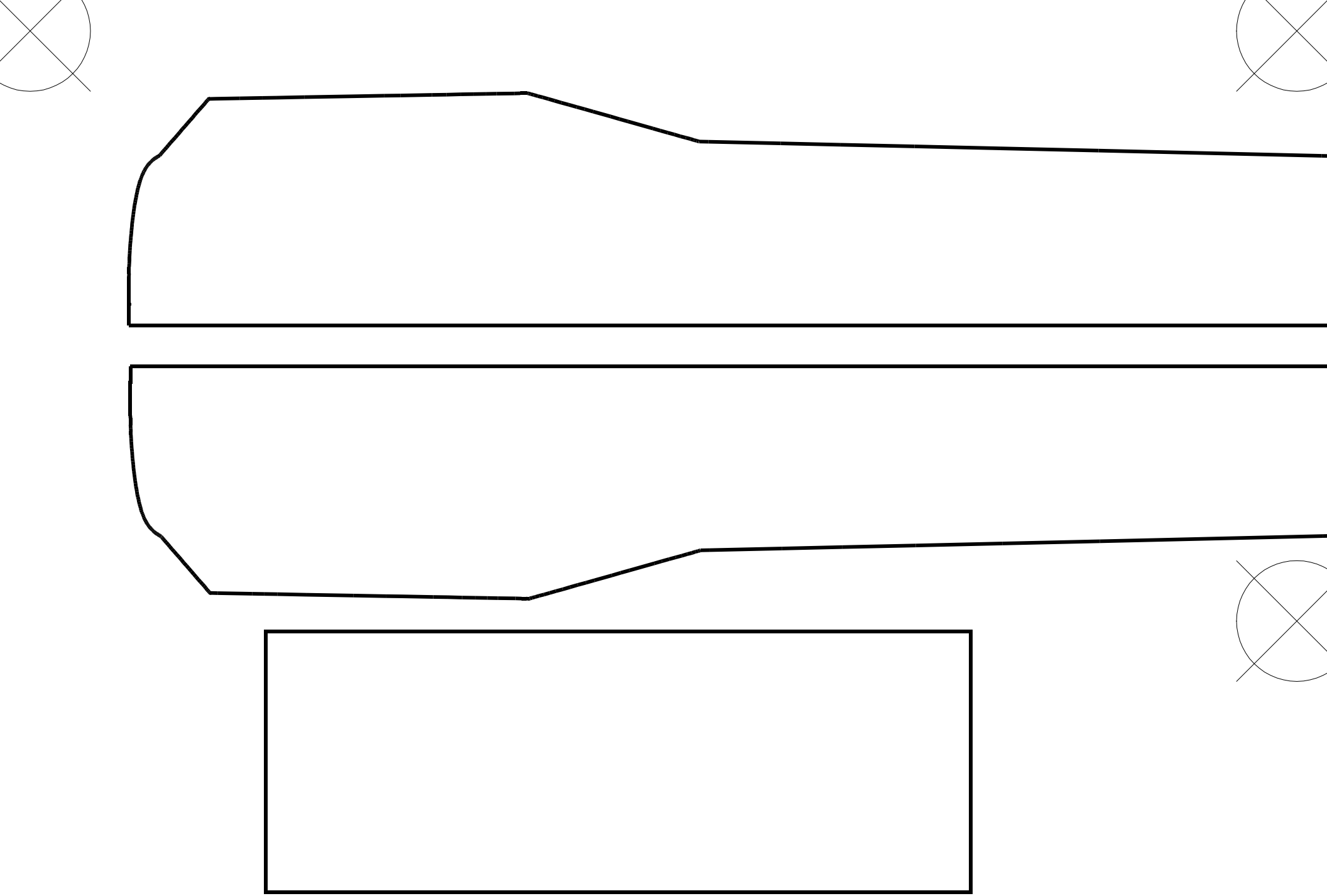

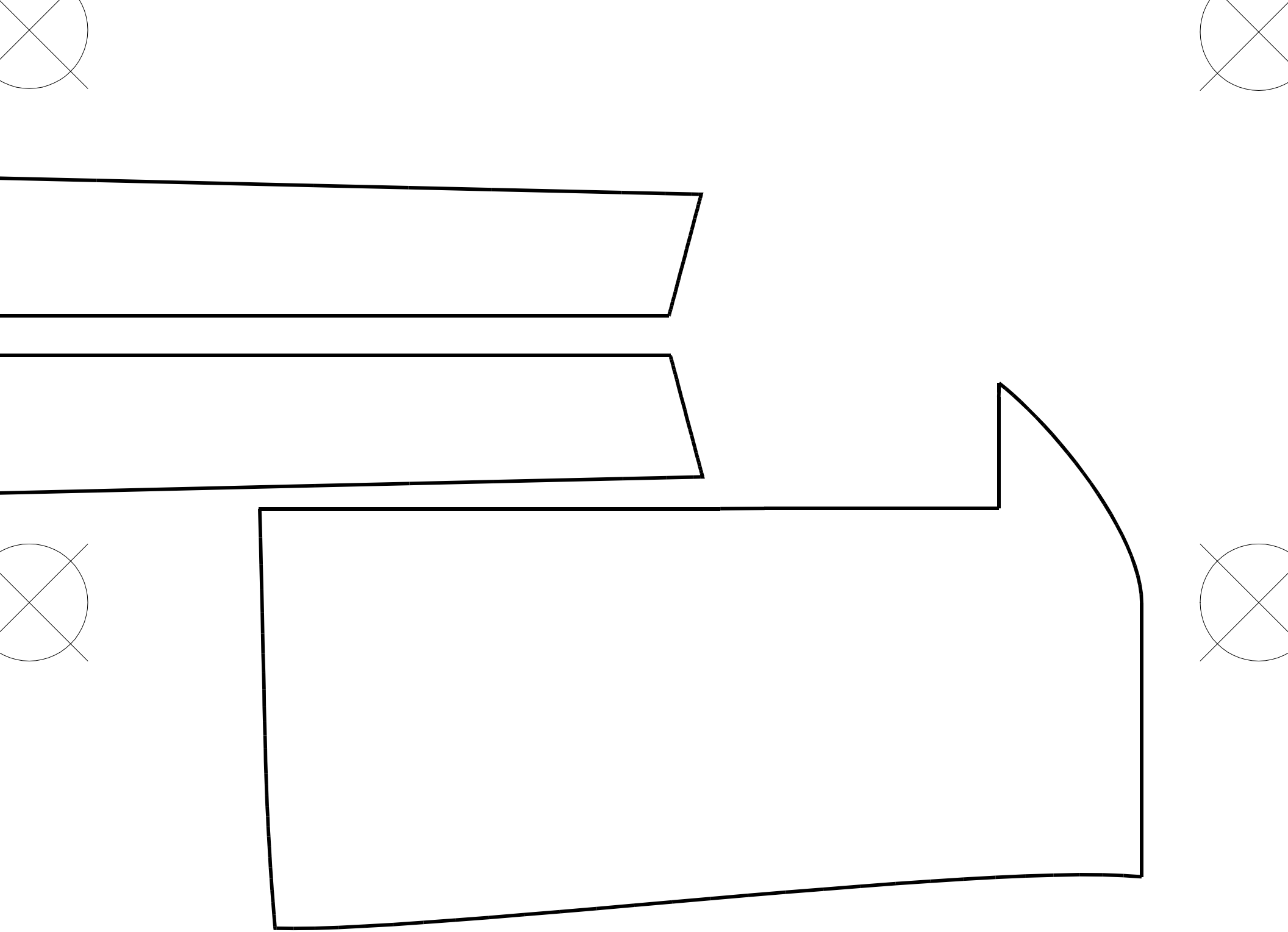

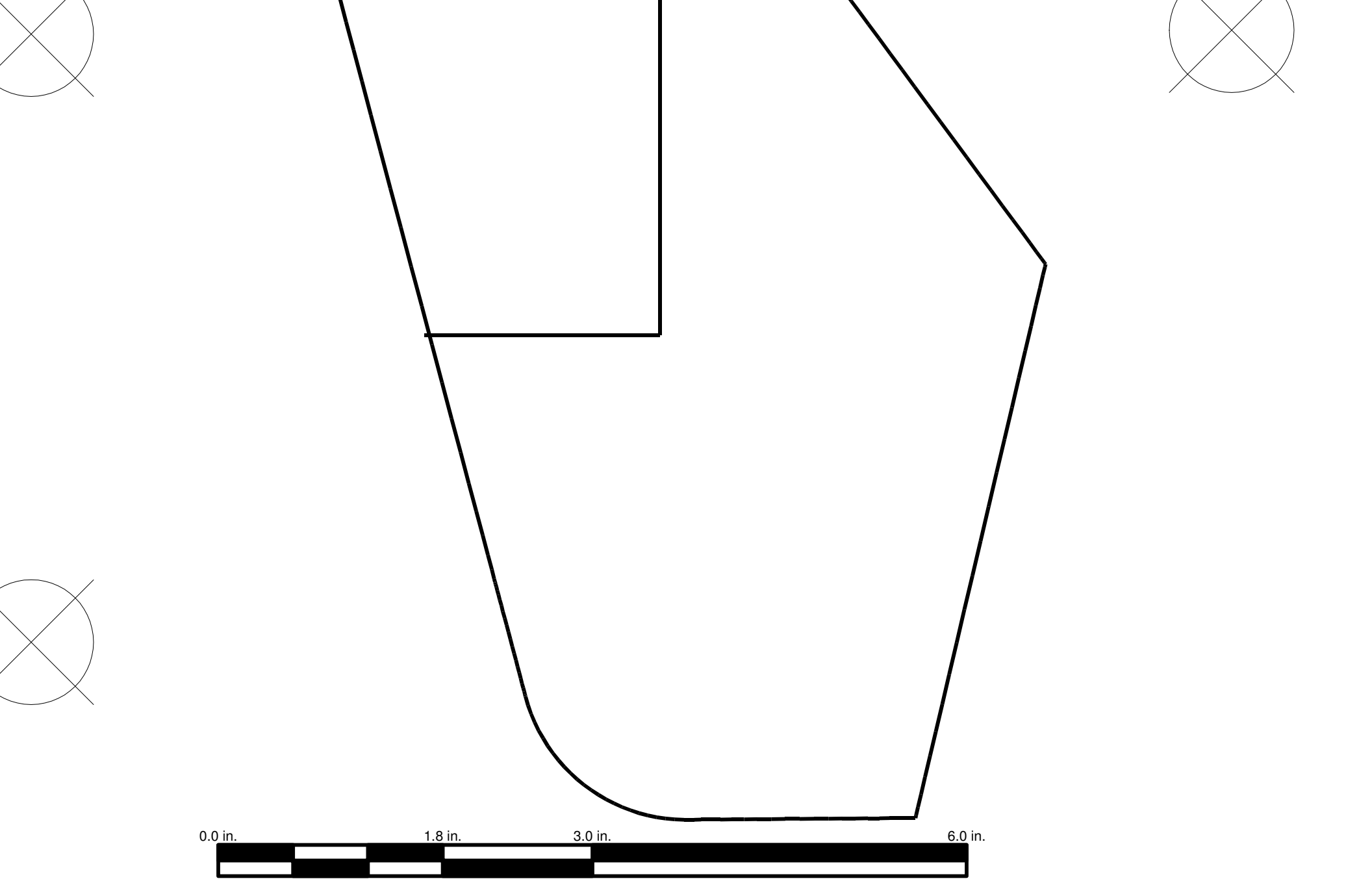
0.0 in.
1.8 in.
3.0 in.
6.0 in.